DocuSign Envelope ID: 672B9E44-FACC-4A20-BC1D-D7DFA11F4809

5/14/99

PROJECT REFERENCE NO.	SHEET NO.
B-5550	UC-3C
DESIGNED BY: SRM	
DRAWN BY: JCC	
CHECKED BY: MKS	
APPROVED BY: MKS	
REVISED:	
STATE OF NORTH CAROLINA DIVISION OF HIGHWAYS	
UTILITIES ENGINEERING SEC. PHONE: (919)707-6690 FAX: (919)250-4151	

NORTH CAROLINA PROFESSIONAL SEAL 036223 ENGINEER JUSTIN S. BOGGS
DocuSigned by: Justin S. Boggs 95170BDE7A1748... 1/18/2023
UTILITY CONSTRUCTION PLANS ONLY

UTILITY CONSTRUCTION

DOCUMENT NOT CONSIDERED FINAL UNLESS ALL SIGNATURES COMPLETED

PROJECT TYPICAL DETAILS

DESIGN CRITERIA:

CODES:

- AASHTO LRFD BRIDGE DESIGN SPECIFICATIONS, 9TH EDITION
- NORTH CAROLINA STATE BUILDING CODE, 2018 EDITION
- ACI 318 "BUILDING CODE REQUIREMENTS FOR REINFORCED CONCRETE"
- AISC MANUAL OF STEEL CONSTRUCTION, FOURTEENTH EDITION

GENERAL CONDITIONS:

THE CONTRACTOR SHALL REVIEW AND VERIFY DIMENSIONS SHOWN IN ALL PLANS AND REVIEW ALL FIELD CONDITIONS THAT MAY AFFECT THE INSTALLATION OF THE FACILITY, SHOULD DISCREPANCIES APPEAR, THE CONTRACTOR SHALL NOTIFY THE ENGINEER IN WRITING TO OBTAIN ENGINEER'S CLARIFICATION BEFORE COMMENCING WITH THE WORK.

ALL DETAILS AND SECTIONS SHOWN ON THE DRAWINGS ARE INTENDED TO BE TYPICAL AND SHALL BE CONSTRUED TO APPLY TO ANY SIMILAR SITUATION ELSE-WHERE ON THE PROJECT, EXCEPT WHERE A DIFFERENT DETAIL IS SHOWN.

STRUCTURAL STEEL:

DESIGN, FABRICATION, ERECTION MATERIALS AND WORKMANSHIP SHALL BE IN ACCORDANCE WITH THE LATEST AISC SPECIFICATIONS AND DESIGN DRAWINGS

ALL STRUCTURAL STEEL:

HP SHAPES –	ASTM A572
STAINLESS STEEL PLATES –	ASTM A240, TYPE 316L
STAINLESS STEEL BOLTS –	ASTM F593, TYPE 316
NUTS –	ASTM F594, TYPE 316
HARDENED STEEL WASHER –	TYPE 316

SHOP AND ERECTION DRAWINGS SHALL BE SUBMITTED TO THE ENGINEER FOR REVIEW.

WELDED CONNECTIONS SHALL BE IN ACCORDANCE WITH THE LATEST AWS STRUCTURAL WELDING CODE REQUIREMENTS. REFER TO NCDOT STANDARD SPECIFICATIONS, SECTION 440-7 FOR FIELD WELDING. ALL WELDS SHALL BE INSPECTED BY AWS D-1.1 AND D-1.6 CERTIFIED WELDING INSPECTOR. ALL WELDS SHALL BE PERFORMED WITH E70XX WELDING RODS.

ABBREVIATIONS:

ø	DIAMETER
#	NUMBER
MIN	MINIMUM
MAX	MAXIMUM
STIF	STIFFENER
TYP	TYPICAL
SS	STAINLESS STEEL

ABBREVIATIONS AND DESIGNATIONS FOR STEEL MEMBERS MAY BE FOUND IN THE CURRENT MANUAL OF STEEL CONSTRUCTION BY AISC

WELDING SYMBOLS AND ABBREVIATIONS MAY BE FOUND IN AWS 2 4

PILE BENT INSTALLATION NOTES:

1. PIPE SLOPES AND INVERTS ARE TO BE AS DESIGNED CONTRACTOR TO DETERMINE PILE CUT OFF ELEVATIONS WITH CONSIDERATION FOR PIPE SLOPES.
2. H-PILES SHALL BE HP12x53 ASTM A572, GRADE 50, MINIMUM .
3. A TOTAL OF TWO (2) PILE BENTS SHALL BE INSTALLED AS SHOWN. PILE BENTS SHALL BE SPACED 48 FEET MAXIMUM CENTER-TO-CENTER OF PILE BENTS.
4. H-PILES SHALL BE DESIGNED AND INSTALLED TO AN ALLOWABLE CAPACITY OF 7 5 TONS IN COMPRESSION AND 1 TONS UPLIFT. HP12x53 PILES TO BE EMBEDDED A MINIMUM OF 25 FEET BELOW EXISTING GRADE. MINIMUM FACTORS OF SAFETY OF 2 0 AND 3 0 SHOULD BE CONSIDERED FOR COMPRESSION AND UPLIFT, RESPECTIVELY.
5. THE PILES SHOULD BE DRIVEN WITH A DRIVING SHOE TO PROTECT THE TIP AND AID IN PENETRATION INTO AND THROUGH CEMENTED OR HARD SOIL LAYERS
6. A SPECIALTY FIRM EMPLOYED BY THE CONTRACTOR SHOULD PROVIDE CAPWAP ANALYSIS TO EVALUATE DRIVING STRESSES PRIOR TO DRIVING PILES FOR THE FIRST PILE INSTALLATION, THE SPECIALTY FIRM SHOULD PROVIDE HIGH STRAIN DYNAMIC TESTING (HSDT) TO ESTABLISH DRIVING CRITERIA PRIOR TO DRIVING REMAINING PILES A SECOND HSDT MAY BE DIRECTED BY THE ENGINEER IF DRIVING CONDITIONS VARY SIGNIFICANTLY BETWEEN BENT LOCATIONS
7. DRIVABILITY AND SELECTION OF THE PILE DRIVING HAMMER IS THE RESPONSIBLITY OF THE CONTRACTOR THE CHOSEN HAMMER AND CUSHION SYSTEM MUST BE SUFFICIENT TO ADVANCE THE PILE TO MINIMUM DESIGN DEPTHS WHILE MAINTAINING DRIVING STRESSES WITHIN THE PILE AT ACCEPTABLE LEVELS

FOUNDATIONS:

1. THE CONTRACTOR SHALL RETAIN THE SERVICES OF A PROFESSIONAL ENGINEER REGISTERED IN THE STATE OF NORTH CAROLINA SPECIALIZING IN GEOTECHNICAL ENGINEERING TO PROVIDE DESIGN DOCUMENTS FOR THE PILE FOUNDATIONS. SUBSURFACE INVESTIGATION SHALL BE PERFORM, IF REQUIRED BY THE PILE FOUNDATION DESIGNER. REFER TO ADDITIONAL REQUIREMENTS IN THE PROJECT SPECIAL PROVISIONS.

GEOTECHNICAL REPORT:

1. STRUCTURE SUBSURFACE INVESTIGATION, BRIDGE ON -L- (RAILROAD AVE) OVER KING CREEK, PREPARED FOR THE STATE OF NORTH CAROLINA DEPARTMENT OF TRANSPORTATION DIVISION OF HIGHWAYS GEOTECHNICAL ENGINEERING UNIT, BY SUMMIT DESIGN AND ENGINEERING SERVICES, PLLC DATED MAY 2018.
2. FOUNDATION RECOMMENDATIONS, BRIDGE NO. 102 OVER KING CREEK ON RAILROAD AVENUE (SR 1402) BY HAROLD D. PRUITT DATED MAY 2018

CONCRETE:

ALL MATERIALS AND METHODS OF CONSTRUCTION SHALL BE IN ACCORDANCE WITH ACI 318 REQUIREMENTS.

ALL CONCRETE SHALL BE AIR-ENTRAINED, CLASS AA CONCRETE (4500 PSI). SEE NCDOT STANDARD SPECIFICATION 1000 FOR ALL REQUIREMENTS OF PORTLAND CEMENT CONCRETE

REINFORCING STEEL:

REINFORCEMENT SHALL CONFORM TO ASTM A615, GRADE 60 REQUIREMENTS AND TO NCDOT STANDARD SPECIFICATIONS SECTION 1070, UNLESS OTHERWISE NOTED.

SUBMITTALS:

1. PILE SUBMITTALS SHALL BE IN ACCORDANCE WITH NCDOT STANDARD SPECIFICATIONS AND INCLUDE THE FOLLOWING:
   - SUBMIT PILE DETAILS INCLUDING DETAILS OF THE TOP CONNECTION TO THE STRUCTURE AND PILE TIP REINFORCEMENT OR POINTS.
   - SUBMIT DESCRIPTION OF PROPOSED PILE DRIVING EQUIPMENT, INCLUDING CRANE, LEADS, HAMMER, CAP BLOCK, CUSHION AND ANVIL DATA PROVIDED SHALL INCLUDE HAMMER MAKE AND MODEL, RAM MASS, ANVIL MASS, RATED STROKE, RATED ENERGY RANGE, RATED SPEED, STEAM OR AIR PRESSURE, PILE DRIVING CAP, MAKE AND MASS, CUSHION BLOCK DIMENSIONS AND MATERIAL TYPE, AND ALL OTHER APPLICABLE DATA ALL EQUIPMENT IS SUBJECT TO SATISFACTORY FIELD PERFORMANCE
   - SUBMIT RESULTS OF PRELIMINARY WAVE EQUATION ANALYSIS FOR THE PILE TYPE AND PROPOSED PILE DRIVING SYSTEM. SUBMIT PRELIMINARY CORRESPONDING DRIVING STRESSES AND OVERALL INSTALLATION PROCEDURES INSTALLATION PROCEDURES SHALL INCLUDE PROVISIONS TO LIMIT DRIVING STRESSES TO MITIGATE PILE DAMAGE SUFFICIENT ANALYSIS SHALL BE PERFORMED TO ADDRESS THE VARIABILITY IN PILE LENGTHS ANTICIPATED ON THE PROJECT THE WAVE EQUATION ANALYSIS SHALL BE PERFORMED BY THE SPECIALTY FIRM HIRED BY THE CONTRACTOR AND SIGNED AND SEALED BY A PROFESSIONAL ENGINEER REGISTERED IN THE NORTH CAROLINA
   - SUBMIT QUALIFICATIONS OF CONTRACTOR'S ENGINEER
   - SUBMIT RESULTS OF PILE TESTING AND ANALYSES PERFORMED BY THE CONTRACTOR FOR INFORMATION
2. STRUCTURAL STEEL SUBMITTALS SHALL BE IN ACCORDANCE NCDOT STANDARD SPECIFICATIONS AND INCLUDE THE FOLLOWING:
   - ERECTION DRAWINGS, DETAILED SHOP DRAWINGS, SCHEDULES, DATA FOR ALL STRUCTURAL STEEL, CONNECTION TO OTHER MEMBERS AND METHOD OF ASSEMBLY. APPROVAL WILL BE FOR STRENGTH ONLY AND SHALL NOT RELIEVE THE CONTRACTOR OF RESPONSIBILITY FOR PROPER FIT OF MEMBERS AND FOR SUPPLYING ALL MATERIAL REQUIRED BY THE CONTRACT DOCUMENTS. CLEARLY IDENTIFY THE PORTION OF THE WORK REPRESENTED BY THE SHOP DRAWINGS, AND CLEARLY IDENTIFY THE PLACEMENT OF EACH PIECE SHOWN ON THE DETAIL DRAWINGS. IDENTIFY ALL WELDS IN CONFORMANCE WITH AWS A2. 4 MARK NUMBERS PAINTED ON THE SHOP ASSEMBLED PIECES OF STEEL SHALL BE THE SAME MARK NUMBERS USED ON THE DETAILED SHOP AND ERECTION DRAWINGS.
   - CERTIFIED COPY OF MILL TEST REPORTS ON EACH STEEL OR STAINLESS STEEL PROPOSED FOR USE SHOWING THE PHYSICAL PROPERTIES AND CHEMICAL ANALYSIS
   - DOCUMENTATION OF WELD INSPECTIONS BY AWS D-1. 1 AND D-1.6 CERTIFIED WELDING INSPECTOR.

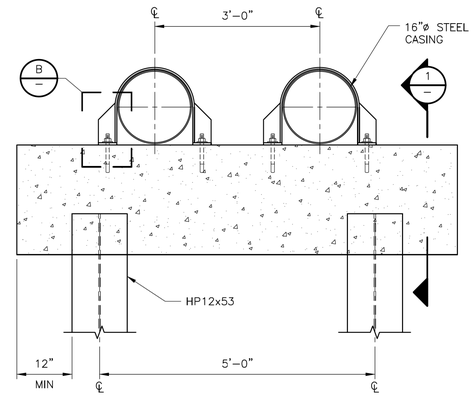

DETAIL A
3/4" = 1'-0"

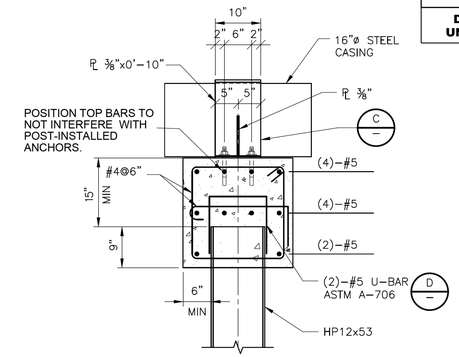

SECTION 1
3/4" = 1'-0"

NOTES:
1. STEEL AND STAINLESS STEEL IN CONTACT WITH CONCRETE TO BE COATED WITH BITUMINOUS PAINT.
2. STAINLESS STEEL IN CONTACT WITH STEEL TO BE ISOLATED WITH ⅛" MIN NEOPRENE GASKET.

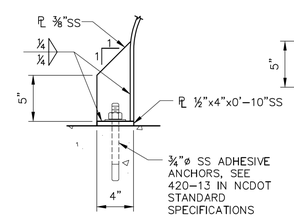

DETAIL B
3/4" = 1'-0"

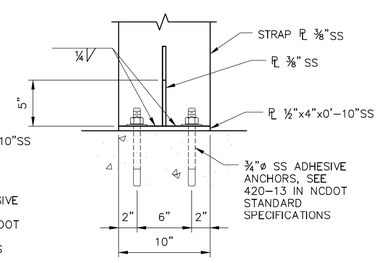

DETAIL C
3/4" = 1'-0"

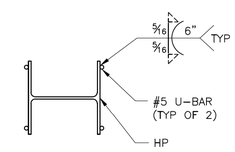

DETAIL D
3/4" = 1'-0"

-SYSTIME
USER:BGSCOTT
FILE:B5550_UC3_notes_UC3_psh.dgn